Jet Metals Spring-Tite Coping EZ System

Overview

Jet Metals Spring-Tite Coping EZ system is a two-part assembly that includes a front and rear segmented cleat and a decorative snap-on coping cover for single ply commercial roof systems.
Our Sping-Tite Coping EZ is available as pre-painted Kynar500® in .040" formed aluminum and 24 gauge galvalume steel. This product features our patent pending 16-gauge (G90) "V" segmented pre-punched cleat spaced at 60" on center, is available in 12" standard cleat lengths and 10' standard coping cover lengths. Concealed splices plates and fasteners are included with the purchase of this product.

Features and Benefits

- Secures roof Membrane to Parapet Wall
- Allows for the use of high-torque screws without penetrating the top surface of the Membrane
- Pre-Punched Segmented Cleat
- ANSI-SPRI ES-1 Certified
- 110 MPH 20-Year Wind Warranty
- 35-Year Gold Standard Paint Warranty
- Corporate and Custom Colors are available

Installation

For complete installation instructions, please refer to Jet Metals Architectural specifications and details.
REVIEW CURRENT JET METALS ARCHITECTURAL SPECIFICATION AND DETAILS FOR SPECIFIC INSTALLATION REQUIREMENTS.

Quality Assurance

Jet Metals Spring-Tite Coping EZ system is tested per ANSI/SPRI Test Method RE-3 bi-directional test for wind requirements for Coping and Wall Caps. The Spring-Tite Coping EZ shall be certified by Jet Metals to design pressures as indicated in current edition of SPRI's Wind Resistance Standard for Edge Systems used with Low Slope Roofing System. This products meets International Building Code minimum requirement.

Technical Services

Engineering and shop drawings, as well as long-form specifications and CAD details, are available from Jet Metals. Product samples, detail sheets, color chips and color charts are also available for submittal packages. For personal assistance with questions or for full submittals, contact Jet Metals or your local independent sales representative.

Specifications

Material	Face	Wall Width	Sustained Pressures
24 gauge	up to 6"	<16" max	-180 psf (*)
24 gauge	up to 6"	16" to 24" max	- 80 psf (*)
0.040 AL	up to 6"	<16" max	-190 psf (*)
0.040 AL	up to 6"	16" to 24" max	-100 psf (*)

* Design Engineer must apply the Factor of Safety
**ADDITIONAL GAUGES - .050 and .063 aluminum and 22 gauge Galvalume are available upon request

677 Celriver Road, Rock Hill, SC 29730
Phone: 866.696.1475
Fax: 803.325.8705
web: jetmetals.com
email: eburns@jetmetals.com

Installation Guide for Spring-Tite Coping EZ

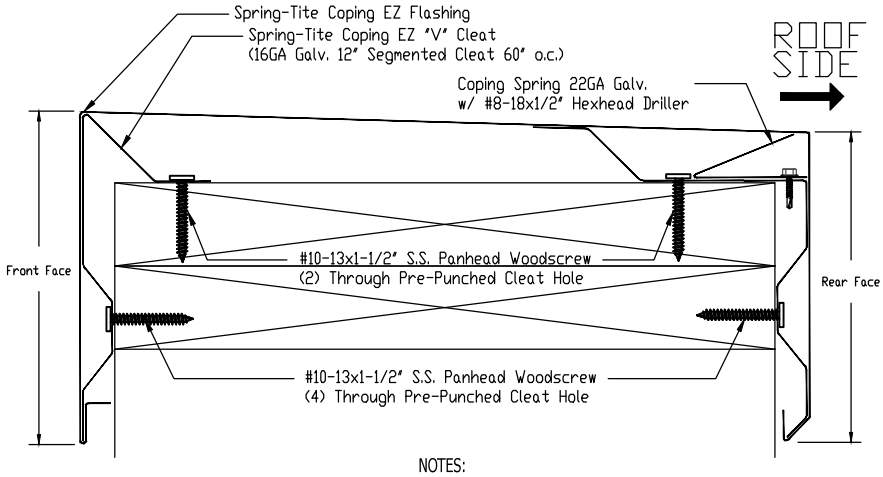

NOTES:
#1 - Isolate all metal parts from ACQ treated wood or other galvanically incompatible material with appropriate membrane material.
#2 - Appliance attachments, such as lightning rods, signs, or antennae that penetrate the water seal, induce a galvanic reaction, or otherwise compromise the effectiveness of the roof edge system, shall be eliminated or isolated to prevent problems per section 8.0 if ANSI/SPRI ES-1. Appliances should also be isolated from, or not attached to, the roof edge system. Consult the lightning protection system manufacturer for specific attachment instructions.

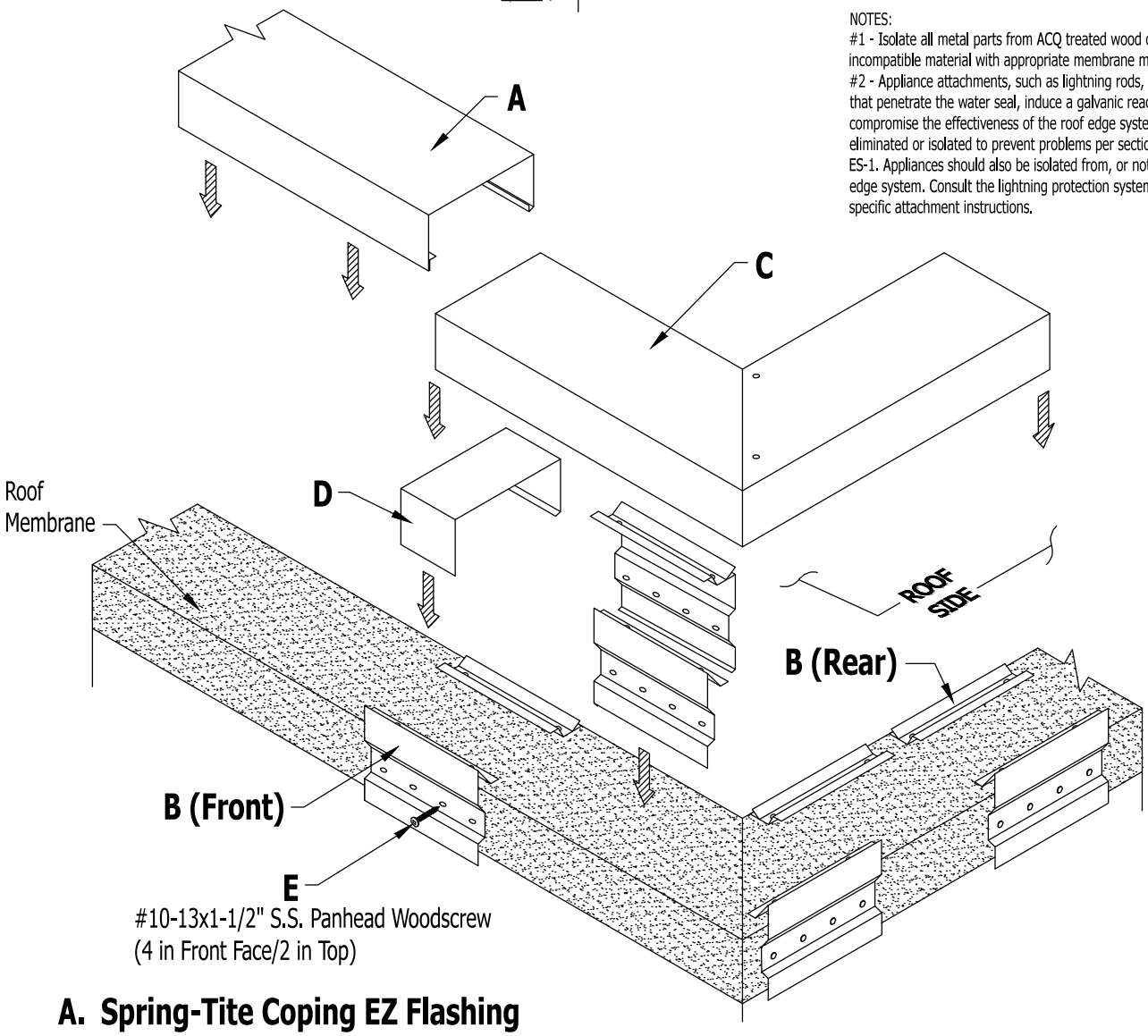

A. Spring-Tite Coping EZ Flashing
10'-0" Std. Lengths (20'-0" Max.)

B. 16GA Galvanized EZ "V" Cleat
12" Lengths (60" o.c. Max.)

C. Spring-Tite Coping EZ Miter Cap
(Outside Corner Shown)

D. Spring-Tite Coping EZ Splice Plate
6" Length (Installed over EZ "V" Cleat)

E. #10-13x1-1/2" S.S. Panhead Woodscrew
at each EZ "V" Cleat. (4 in Face/2 in Top)
(Included and Required)

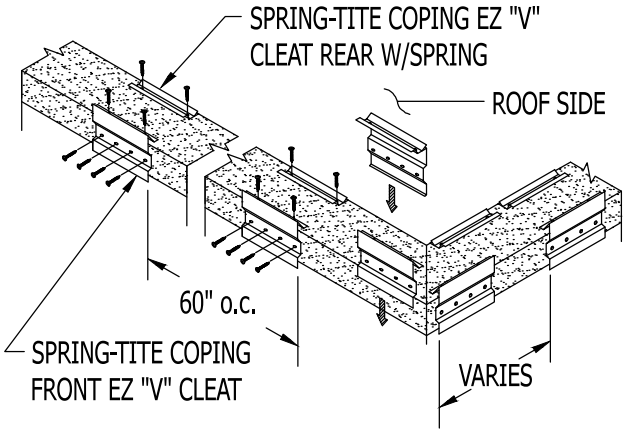

STEP 1: Installing 16GA Galvanized EZ "V" Cleat

Prior to installing the cleats, ensure that all metal components have been isolated from ACQ treated lumber with appropriate membrane material. Butt EZ "V" Cleats together at corner conditions. Cleats are included as pairs, one Front and one Rear. Rear Cleat with Spring is to be installed on the roof side. Install cleats working away from corners ensuring one Front and Rear EZ "V" Cleat will be under every flashing lap, at no greater than 60" on center. Attach the Cleats using #10-13x1-1/2" S.S. Panhead Woodscrews provided into each pre-punched hole. Four (4) in cleat face and two (2) in cleat top.

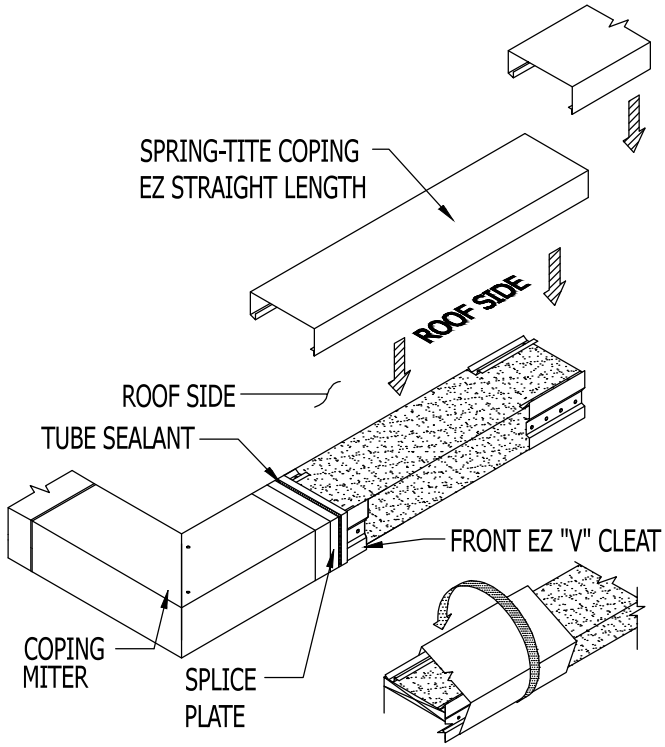

STEP 3: Installing Spring-Tite EZ Coping Straight Lengths

Make sure the EZ "V" Cleats line up centered with the ends of the coping flashing. Apply a bead of Tube Sealant over the Splice Plate. Hook the front face of the coping flashing over the kick of the Front EZ "V" Cleats, then rotate the coping flashing over the top of the parapet and push down the rear face of the coping flashing over the Rear EZ "V" Cleat to engage the rear kick. Consider lengths of all straight pieces prior to cutting to avoid creating relatively short sections adjacent to one another.

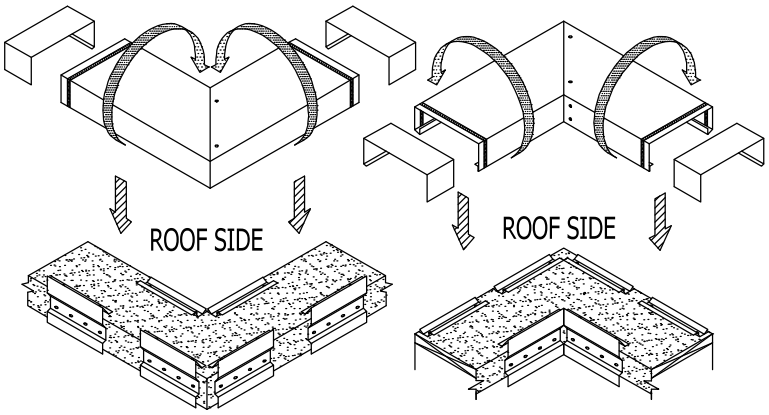

OUTSIDE CORNER **INSIDE CORNER**

STEP 2: Installing Spring-Tite Coping EZ Miters

Locate the Miter for the appropriate corner. Make sure the EZ "V" Cleats line up centered with the ends of the Miter. Apply a bead of Tube Sealant inside each end of the Miter. Install a Splice Plate into each end of the Miter. Hook the front face of the Miter over the kick of the Front EZ "V" Cleat, then rotate the Miter over the top of the parapet and push down the rear face of the Miter over the Rear EZ "V" Cleat to engage the rear kick.

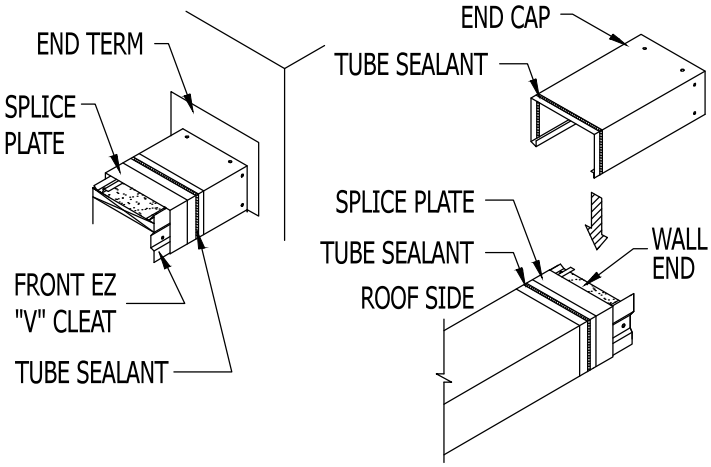

STEP 4: Installing Spring-Tite Coping EZ End Caps/Terms

Pop-rivet the End Cap and End Term inserts into place. Apply a bead of Tube Sealant and install a Splice Plate into the End Term or End Cap. Install End Caps and End Terms by hooking the front drip over the kick out on the Front EZ "V" Cleat and rotating over the part over the parapet. End Caps and End Terms must be restrained from moving by securing with fasteners through the roof side leg.